Back Pull - out
End Suction Cetrifugal Pump

Back Pull - out End Suction Cetrifugal Pump

Back Pull - out End Suction Cetrifugal Pump

Range from 32 mm to 250 mm discharge

Easyflow range fully complies to both performance and dimensional standards for the International Standard DIN 24255

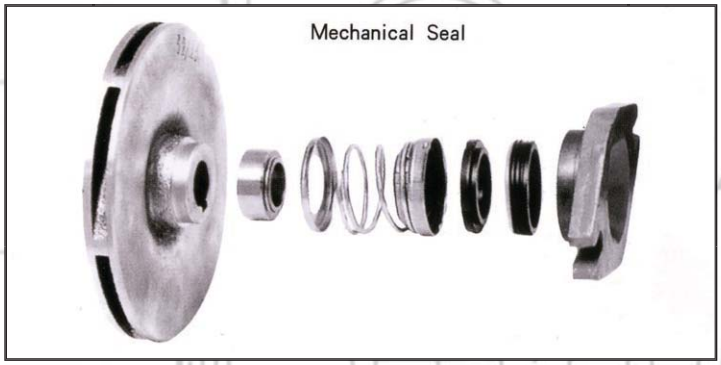

Stuffing Box
Standard stuffing box includes gland packing with a lantern ring incorporating high pressure internal flushing.External flush can be fitted and pump can be supplied with a mechanical seal.Conversion from packed box to mechanicalseal and back to packing is easy. All pumps that can operate at 2 pole speed have a close tolerance stuffing box bush fitted.

Impeller
Double shrouded type is hydraulically balanced and positively driven by shaft key and axially locked between sleeve and impeller nut.

Shaft
A domed type locking nut seats the stainless steel shaft at the impeller Only 4 shafts are required to cover whole 37 sizes and reduces inventory to a minimum.

Bearing Housing
Rugged cast iron construction with only three bearing housings covering complete range of pumps which gives many common interchangeable parts

Bearings
Bearings on 33 sizes are grease lubricated-sealed for life.
4 sizes have oil lubricated bearings and for this arrangement the housing includes an oil level sight glass and vent.

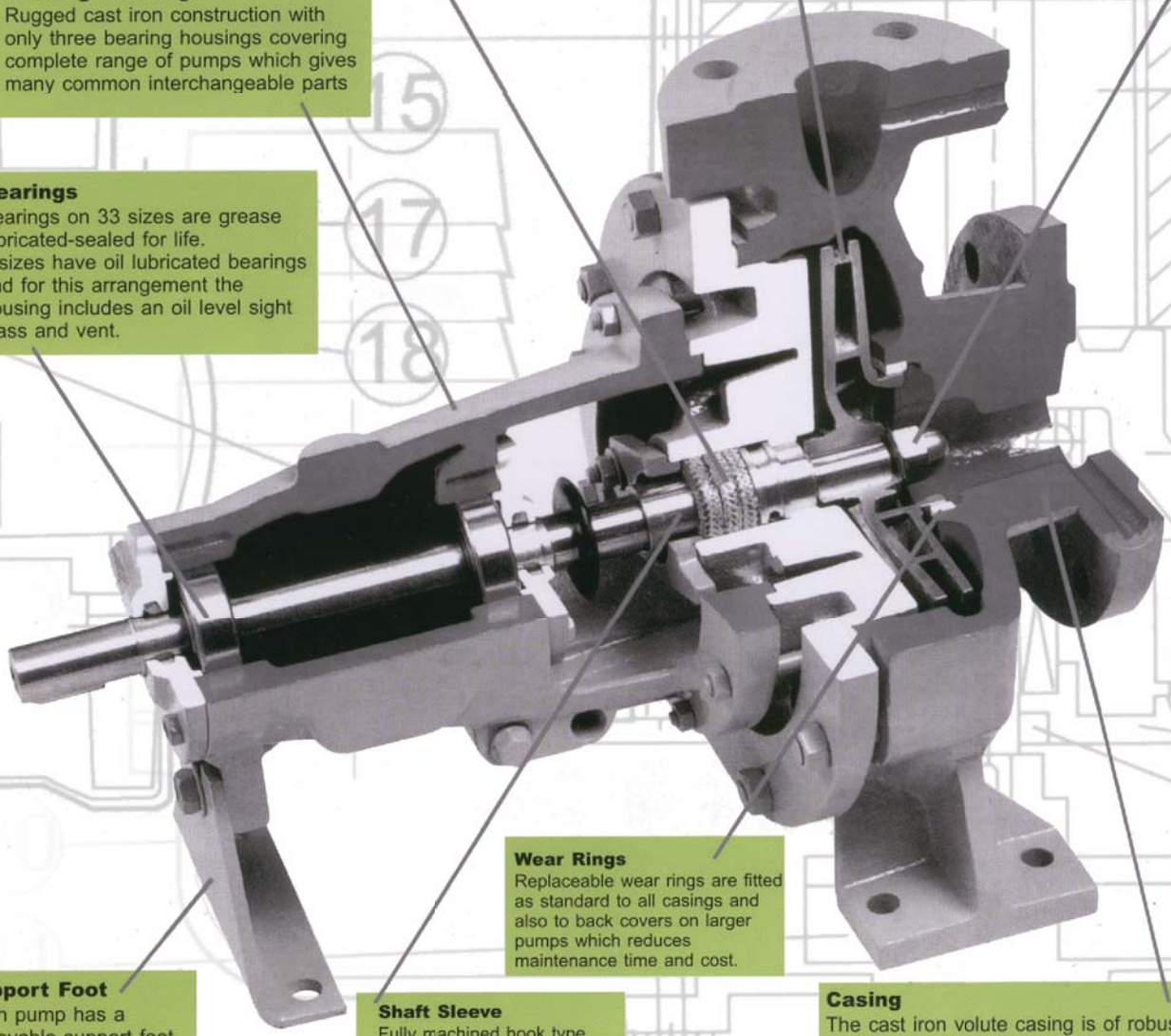

Wear Rings
Replaceable wear rings are fitted as standard to all casings and also to back covers on larger pumps which reduces maintenance time and cost.

Support Foot
Each pump has a removable support foot fitted at drive end for greater rigidity.

Shaft Sleeve
Fully machined hook type shaft sleeve prevents shaft damage under the gland packing which substantially reduces maintenance costs.

Casing
The cast iron volute casing is of robust design with integrally cast feet, vertical top centreline discharge with axial suction incorporating cast inlet vane to give best flow to impeller eye.

Back Pull - out End Suction Cetrifugal Pump

Selection Range Chart

n=2900rpm

Selection charts of PA single stage centrifugal pump

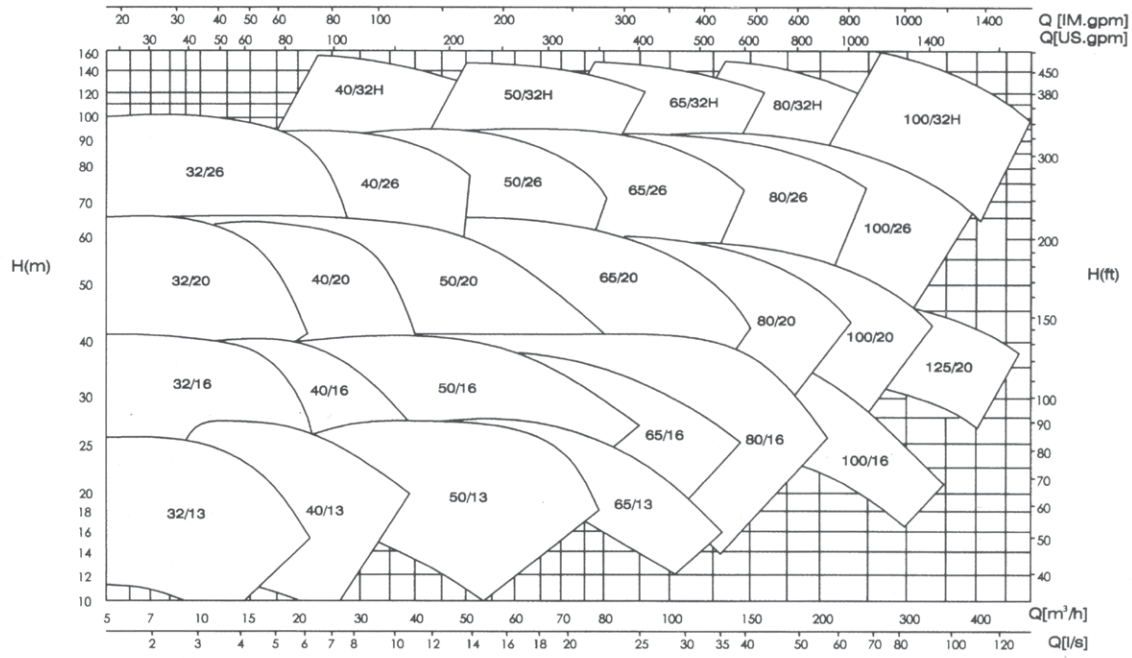

n=1450rpm

Selection charts of PA single stage centrifugal pump

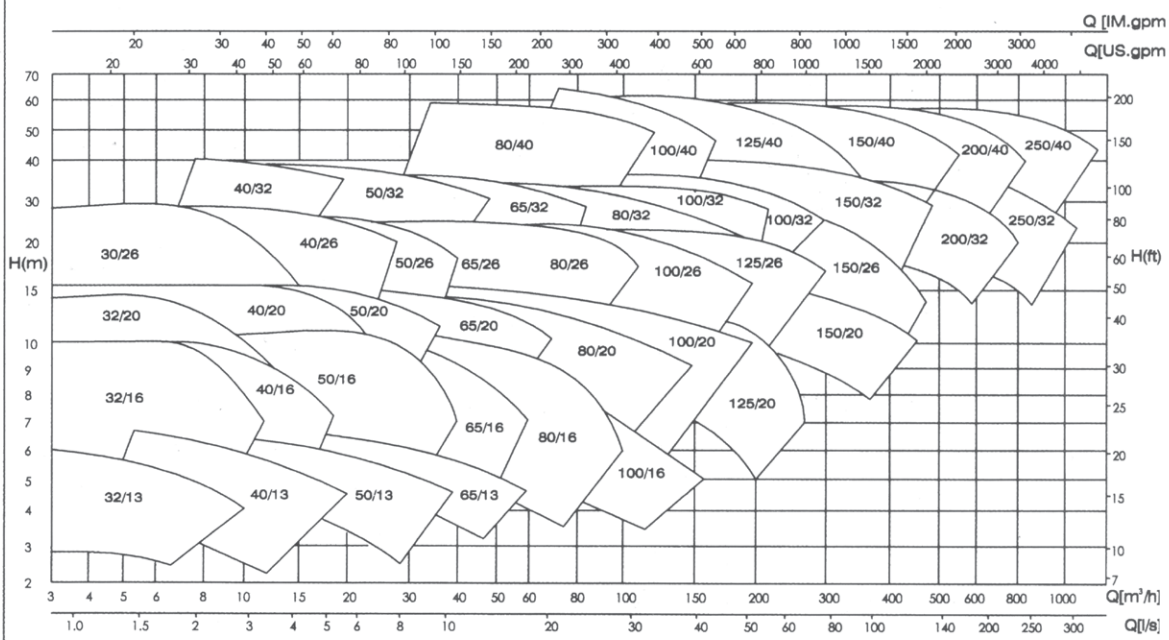

Back Pull - out End Suction Cetrifugal Pump

Dimensions

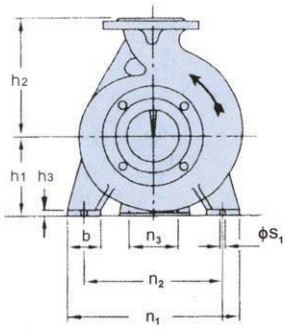

END ELEVATION

FLANGES DRILLED TO ISO 2084 - 16BAR

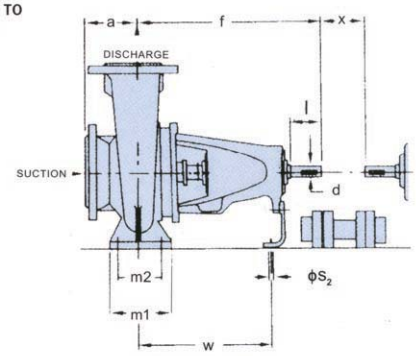

SIDE ELEVATION

Model	Shaft Diameter	Suction	Discharge	Pump Dimensions							Foot Dimensions								Shaft End		Coupling Key	Net Weight (Kg)
				a	f	h1	h2	b	m1	m2	n_1	n_2	n_3	h3	Ø S_1	Ø S_2	W	X	d	l		
PA32-13				80		112	140	50	100	70	190	140	100									28
PA32-16	25	50	32	80	360	132	160	50	100	70	240	190	100	14	14	14	267	140	24	50	8X7	36
PA32-20				80		160	180	50	100	70	240	190	110									43
PA32-26				100		180	225	65	125	95	320	250	110									63
PA40-13	25			80	360	112	140	50	100	70	210	160	100				267		24	50	8X7	31
PA40-16	25			80	360	132	160	50	100	70	240	190	100				267		24	50	8X7	37
PA40-20	25	65	40	100	360	160	180	50	100	70	265	212	110	14	14	14	267	140	24	50	8X7	46
PA40-26	25			100	360	180	225	65	125	95	320	250	110				267		24	50	8X7	63
PA40-32	35			125	470	200	250	65	125	95	350	280	110				342		32	80	10X8	96
PA40/32H	45H			125	519	200	250	65	125	95	350	280	110				362		42	110	12X8	104
PA50-13	25			100	360	132	160	50	100	70	240	190		14			267		24	50	8X7	34
PA50-16	25			100	360	160	180	50	100	70	265	212		14			267		24	50	8X7	38
PA50-20	25	65	50	100	360	160	200	50	100	70	265	212	110	14	14	14	267	140	24	50	8X7	48
PA50-26	25			100	360	180	225	65	125	95	320	250		14			267		24	50	8X7	65
PA50-32	35			125	470	225	280	65	125	95	350	280		16			342		32	80	10X8	101
PA50-32H	45H			125	523.5	225	280	65	125	95	350	280		16			364		42	110	12X8	110
PA65-13	25			100	360	160	180	65	125	95	280	212		14	14		267		24	50	8X7	40
PA65-16	25			100	360	160	200	65	125	95	280	212		14	14		267		24	50	8X7	44
PA65-20	25	80	65	100	360	180	225	65	125	95	320	250	110	14	14	14	267	140	24	50	8X7	54
PA65-26	35			100	470	200	250	80	160	120	360	280		16	18		342		32	80	10X8	83
PA65-32	35			125	470	225	280	80	160	120	400	315		16	18		342		32	80	10X8	110
PA65-32H	45H			125	520	225	280	80	160	120	400	315		16	18		363		42	110	12X8	118
PA80-16	25				360	180	225	65	125	95	320	250		14	14		267		24	50	8X7	55
PA80-20	35				470	180	250	65	125	95	345	280		14	14		342		32	80	10X8	72
PA80-26	35	100	80	125	470	200	280	80	160	120	400	315	110	16	18	14	342	140	32	80	10X8	92
PA80-32	35				470	250	315	80	160	120	400	315		16	18		342		32	80	10X8	120
PA80-32H	45H				521	250	315	80	160	120	440	355		16	18		363		42	110	12X8	128
PA80-40	45				530	280	355	80	160	120	440	355		18	18		370		42	1 10	12X8	162
PAI00-16	35			125	470	200	250	80	160	120	360	280		16	18		342		32	80	10X8	81
PAI 00-20	35			125	470	200	280	80	160	120	360	280		16	18		342		32	80	10X8	87
PAI00-26	35			140	470	225	280	80	160	120	400	315		16	18		342		32	80	10X8	110
PAI00-26H	45H	125	100	140	520	225	280	80	160	120	400	315	110	16	18	14	363	140	42	110	12X8	117
PAI00-32	35			140	470	250	315	80	160	120	400	315		16	18		342		32	80	10X8	134
PAI00-32H	45H			140	520	250	315	80	160	120	400	315		16	18		363		42	110	12X8	143
PAI 00-40	45			140	530	280	355	100	200	150	500	400		18	23		370		42	110	12X8	177
PAI 25-20	35				470	250	315	80	160	120	400	315		16	18		342		32	80	10X8	1 1
PAI 25-26	35	150	125	140	470	250	355	80	160	120	400	315	110	16	18	14	342	140	32	80	10X8	1
PAI 25-32	45				530	280	355	100	200	150	500	400		18	23		370		42	110	12X8	115
PAI 25-40	45				530	315	400	100	200	150	500	400		18	23		370		42	110	12X8	163
																						190
PAI50-20	35				495	280	400				550	450		20			367		32	80	10X8	140
PAI50-26	45	200	150	160	530	250	355	100	200	150	450	350	110	18	23	14	370	140	42	110	12X8	164
PAI 50-32	45				530	280	400				550	450		18			370		42	110	12X8	175
PAI50-40	45				530	315	450				550	450		18			370		42	110	12X8	210
PA200-32		250	200	225	725	315	435	100	200	150	550	450	140				500		48		14X10	251
PA200-40	55	250	200	225	670	315	450	100	200	150	550	450	140	30	23	14	500	140	48	110	14X10	295
PA250-32		300	250	250	693	400	500	100	270	180	500	400	180				513		48		14X10	311
PA250-40		300	250	250	797	450	505	125	270	210	600	500	180				611		60		18X12	390

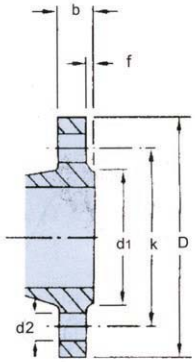

Flange Dimensions and drilling according to ISO 2084 - 16 BAR (BS 4504 - 1969 TABLE 16/11).*Holes - Equally spaced stradding pump centreline.

Flange Data

Dimensions in mm

BRACH SIZE	FLANGE		RAISED FACE		DRILLING*			BOLTING
	D	b	di	f	No.	d2	k	
32	140	18	78	2	4	18	100	M16
40	150	18	88	3	4	18	110	M16
50	165	20	102	3	4	18	125	M16
65	185	20	122	3	4	18	145	M16
80	200	22	138	3	8	18	160	M16
100	220	24	158	3	8	18	180	M16
125	250	26	188	3	8	18	210	M16
150	285	26	212	3	8	22	240	M20
200	340	30	268	3	12	22	295	M20

Back Pull - out End Suction Cetrifugal Pump

APPLICATIONS:

Air Conditioning
Heating and Ventilating
Refrigeration
Fire Protection
Plumbing
Food and Drink Manufacture
Circulating
Water Pressure Boosting
Transfer
Water Treatment and supply
Irrigation
Drainage
Factory Pumping
Process Industry
Petroleum Products
Greneral Industry

MATERIALS OF CONSTRUCTION

	Bonze Fitted	Cast Iron	All Iron
Casing	Cast Iron	Cast Iron	Cast Iron
Impeller	Bronze	Cast Iron	Cast Iron
Wear Ring	Cast Iron	Cast Iron	Csat Iron
Shaft	Stainless steel	Stainless steel	Stainless Steel
Shaft Nut	Stainless steel	Stainless steel	Cast Iron
Shaft Sleeve	Stainless steel	Stainless steel	Stainless Steel
Lantern Ring	Cast Iron	Cast Iron	Cast Iron
Gland	Cast Iron	Cast Iron	Cast Iron

EASYFLOW BACK PULL-OUT FEATURE:

This design feature allows the complete rotating element to be removed for servicing without disconnecting pipework. If a spacer coupling is fitted then motor does not háve to be moved. On re-assembly of pump coupling re-alignment problems are completely eliminated.

MATERIALS SPECIFICATION

Materiál	Nearest Equivalent Standard			
	Australian	British	American	DIN
Cast Iron	AS 1830/T200	BS 1452: GR220	ASTM A48 Class 30	DIN 1691 GG 20
Bronze	AS 1565/836B	BS 1400: LG2	ASTM B145 CDA836	DIN 1705
Stainless Steel	AS 1444 GR420	BS 970: 420/S37	AISI 420	DIN 17440